

ORDERING CODE

ACK	L	–	25	x	90	–	□ ①
↑	↑		↑		↑		↑
Model	Axial code		Cylinder Diameter				Port Size Code

ACK: Rotary Pneumatic Cylinder
ACKD: Rotary Pneumatic Cylinder
(For 90 degree only)

L: Left Rotation
R: Right Rotation

25
32
42
50
63

90: 90°
180: 180°

Empty: PT
T: NPT
G: G

Graphic Symbol

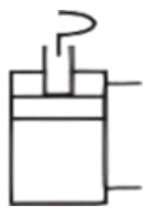

Remark:
Pls feel free to contact with us if have any customized request.

SPECIFICATION

Model	ACK				
Inner Diameter(mm)	25	32	40	50	63
Working Medium	Air(Filtered through a filter screen of 40μm or more)				
Operating Pressure Range	0.15-1.0MPa(22-145psi)				
Working Temperature	-20-70℃				
Usage Speed Range(mm/s)	50-200				
Rotation Angle Tolerance Range	±1.5。				
Pipe Connection Diameter	M5x0.8	PT1/8			

OVERALLDIMENSION&STRUCTURE

ACK Series

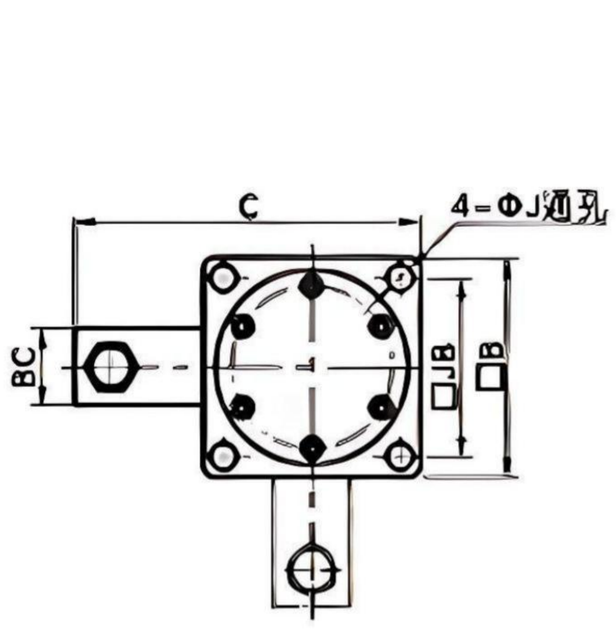

ACKD Series

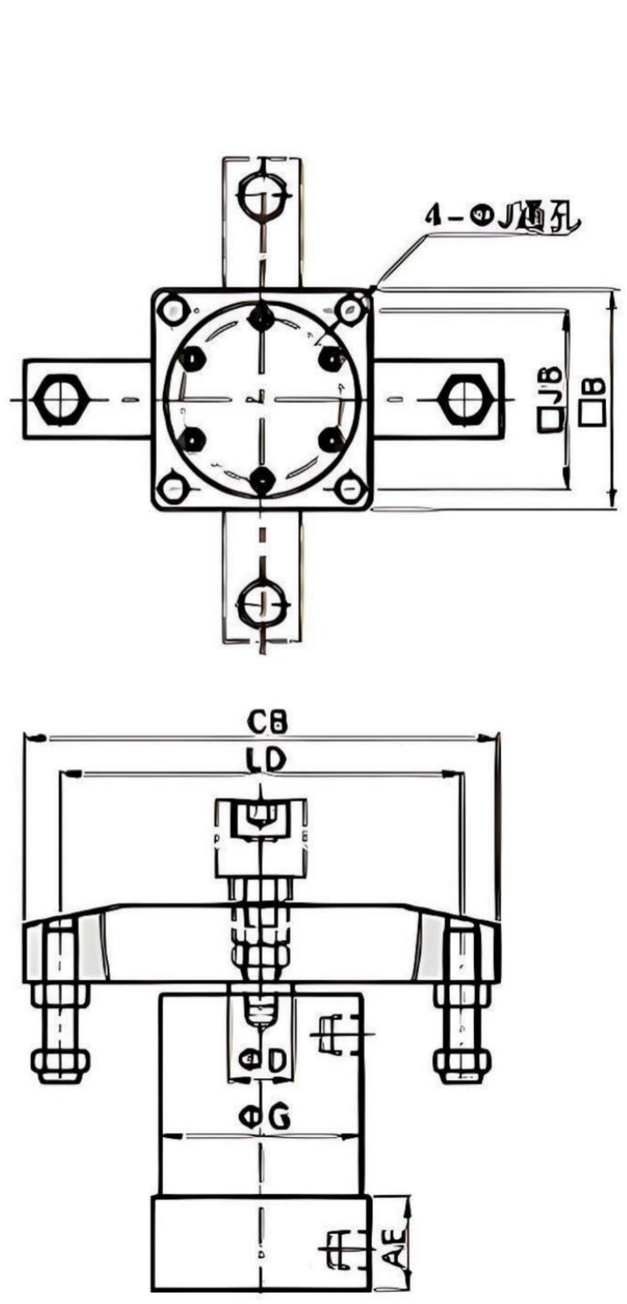

Cylinder Diameter	A	AC	AD	AE	B	BC	C	CA	CB	D	F(90°/180°)
25	85	65	16	23	40	16	58	48	76	14	26
32	40	97	74	19	26	58	19	88	70	118	16
40	97	74	19	26	58	19	88	70	118	16	27
50	109.5	80	25.5	26	68	25.5	14	93	160	20	29
63	115.5	86	25.5	30	82	25.5	121	93	160	20	29

F1(90°)	F1(180°)	F2(90°)	F2(180°)	G	J	JB	L	LA	LB	LC	LD	P
14	20	12	6	35	4.5	30	M6x1.0	29.5	30	8	60	M5x0.8
14	20	12	6	50	6.5	44	M8x1.25	37.5	50	9	100	PT1/8
15	21	12	6	55	6.5	48	M8x1.25	37.5	50	9	100	PT1/8
15	21	14	8	60	8.5	55	M10x1.5	45	70	10	140	PT1/8
15	21	14	8	70	8.2	64	M10x1.5	45	70	10	140	PT1/8