

ORDERING CODE

ACP
ACPD
ACPJ 20 X 30 - 30 S B □ □

Empty: No magnets attached
S: Magnetite

Empty: PT
T: NPT
G: G

cylinder stroke

Model | Cylinder Diameter | stroke adjustment | Empty: Internal Thread B: External Thread

ACP: Compact cylinder (compound type)
ASP: (single-action extrusion type)
ATP: (single-acting introduced type)
ACPD: (double-axis compound type)
ACPJ: (double-axis compound stroke adjustable type)

12 16 20 25 32 40 50 63 80 100

ACPJ: 10:10mm
20: 20mm
30: 30mm
40: 40mm
50: 50mm
75: 75mm
100: 100mm

Empty: No installation accessories
FA: Front flange connection plate
FB: Rear flange connection plate
CA: Single-ear fixed seat
CB: Double-ear fixed seat
LB: Axial fixed seat

Graphic Symbol

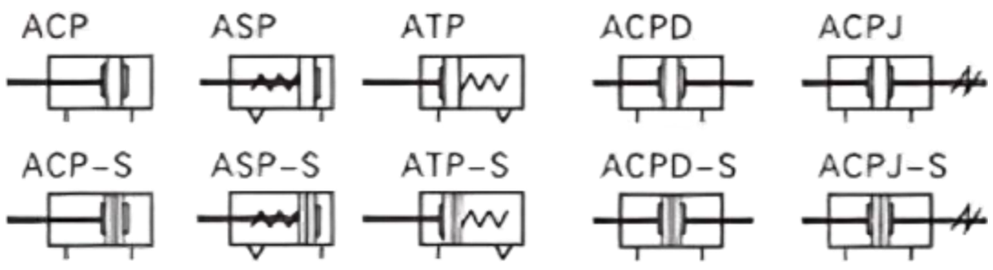

Remark:
Pls feel free to contact with us if have any customized request.

SPECIFICATION

Model		ACK									
Inner diameter(mm)		12	16	20	25	32	40	50	63	80	100
Action pattern		Compound type, single-action extrusion type, single-acting introduced type									
Operating pressure range	Compound type	0.15-1.0MPa(22-145Psi)(1.0-10.0bar)									
	single-action type	0.2-1.0MPa(28-145Psi)(2.0-10.0bar)									
Compression resistance		1.5MPa(215Psi)(15bar)									
Operating temperature range		-20-70℃									
The rate range of use		Compound type: 30-500mm/s; Single-action type: 50-500mm/s									
Buffer type		Anti-collision pad									
Pipe connection diameter		M5x0.8				G1/8					G1/4

CYLINDER STROKE

Inner diameter(mm)		Standard stroke(mm)	Maximum stroke	Minimum stroke
12 16	Compound type	5 10 15 20 25 30 35 40 45 50 55 60 70 75 80 90 95 100 110	200	200
		120 125 150 160 175 200	200	200
	single-action type	5 10	10	-
20 25	Compound type	5 10 15 20 25 30 35 40 45 50 55 60 70 75 80 90 95 100 110	200	200
		120 125 150 160 175 200	200	200
	single-action type	5 10 15 20 25	25	-
32 40 50 63	Compound type	5 10 15 20 25 30 35 40 45 50 55 60 70 75 80 90 95 100 110	300	300
		120 125 150 160 175 200 225 250 275 300	300	300
	single-action type	5 10 15 20 25	25	-
80 100	Compound type	5 10 15 20 25 30 35 40 45 50 55 60 70 75 80 90 95 100 110	400	400
		120 125 150 160 175 200 225 250 275 300 325 350 375 400	400	400
	single-action type	5 10 15 20 25	25	-

ACP

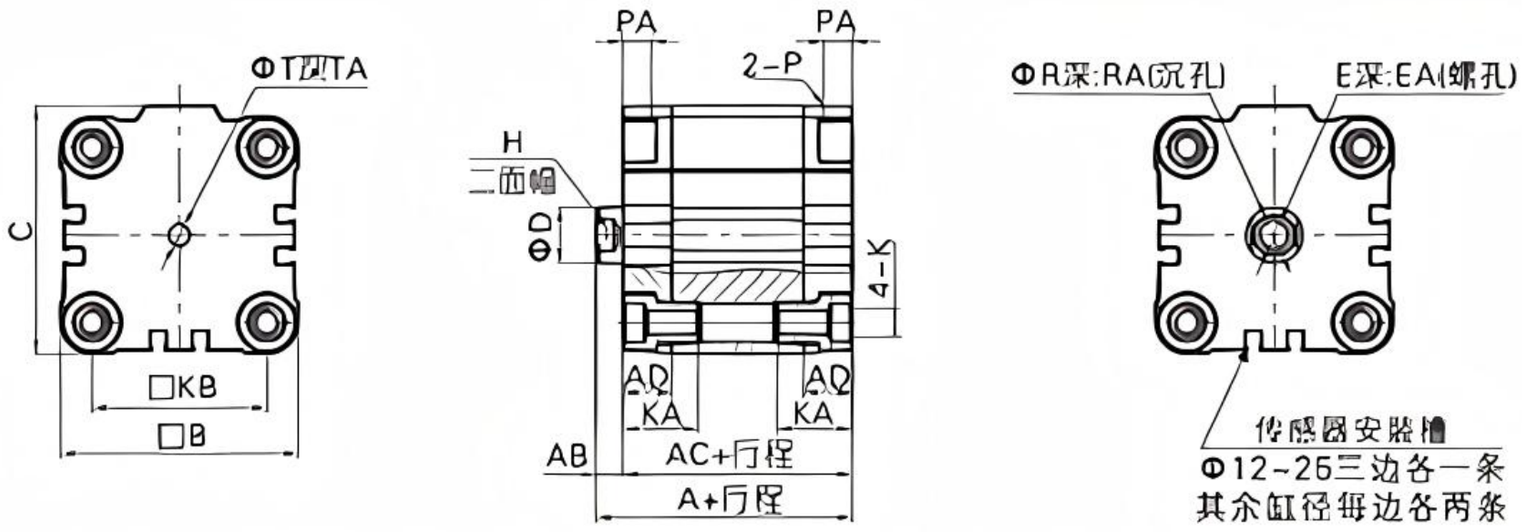

ASP

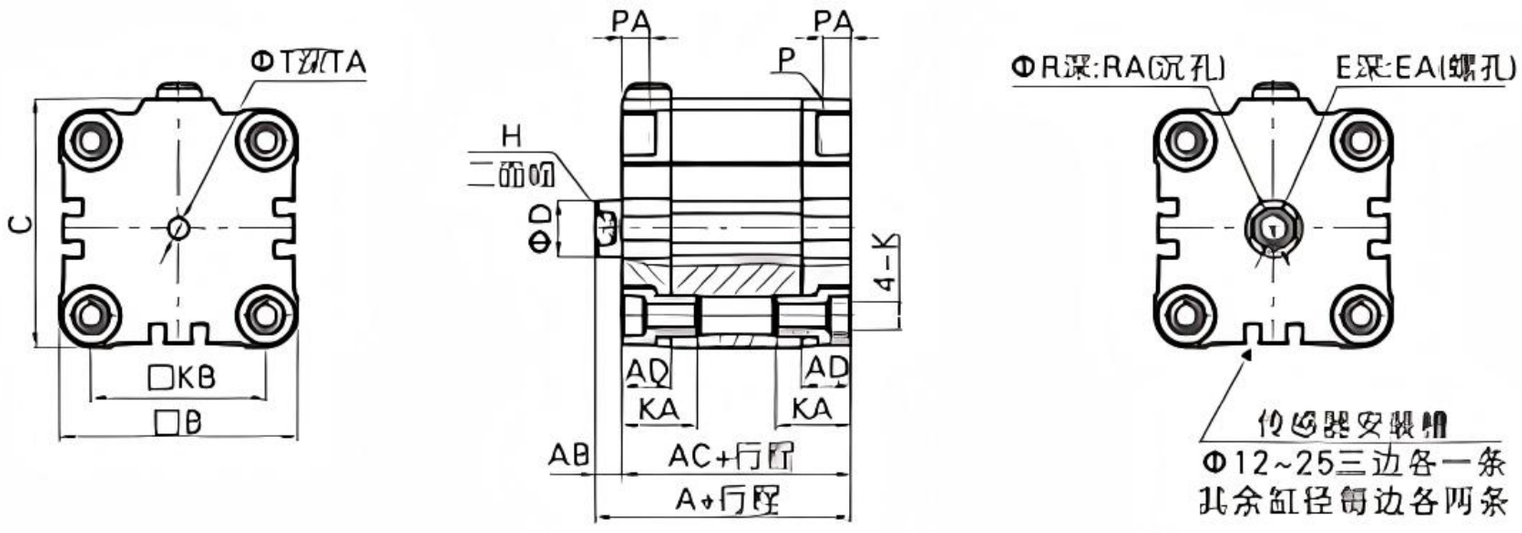

ATP

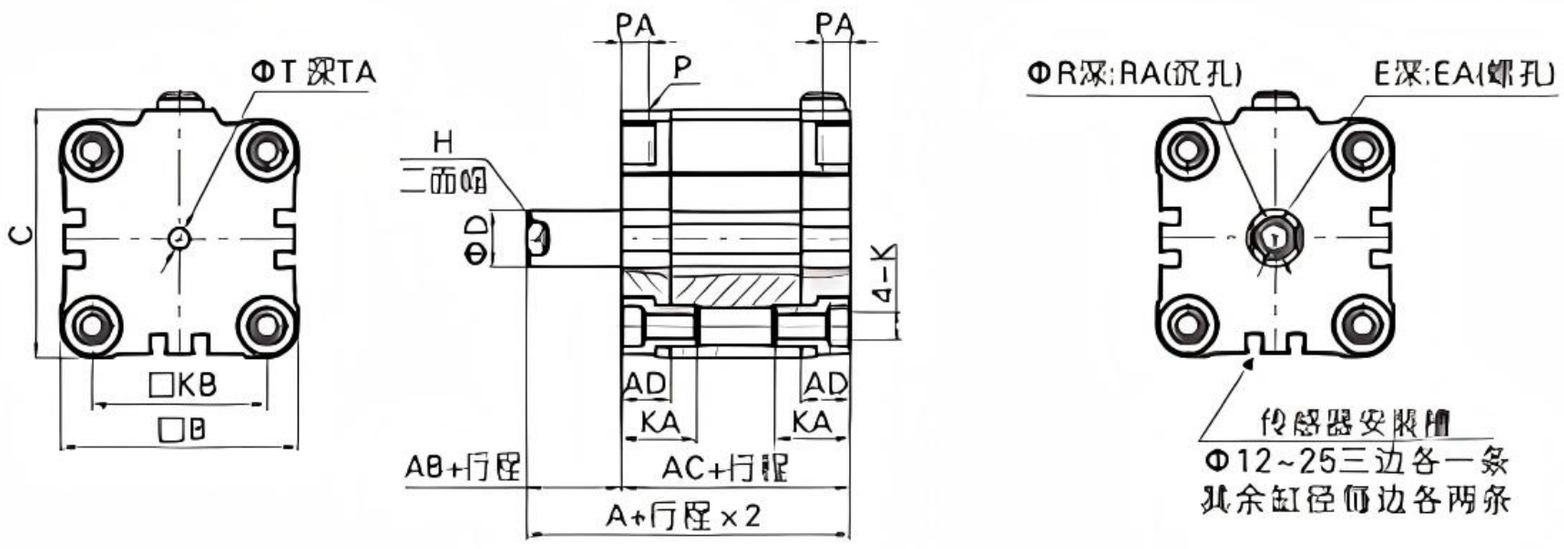

Cylinder diameter(mm)/Symbol	A	AB	AC	AD	B	C	D	E	EA	H	K	KA	KB	P	PA	R	RA	T	TA
12	42.5	4.5	38	11.5	29	30	6	M3x0.5	8	5	M4x0.7	18	18	M5x0.8	7	3.5	1.5	6	4
16	42.5	4.5	38	11.5	29	30	8	M4x0.7	10	6	M4x0.7	18	18	M5x0.8	7	4.5	1.5	6	4
20	42.5	4.5	38	11.5	36	37.5	10	M5x0.8	18	22	M5x0.8	18	22	M5x0.8	7	5.5	2	6	4
25	45	5.5	39.5	11.5	40	41.5	10	M5x0.8	18	26	M5x0.8	18	26	M5x0.8	7	5.5	2	6.1	4
32	50.5	6	44.5	14	50	52	12	M6x1.0	21	32	M6x1.0	21	32	G1/8	8	6.5	2.5	6.1	4
40	52	6.5	45.5	14	60	62.5	12	M6x1.0	21	42	M6x1.0	21	42	G1/8	8	6.5	2.5	6.1	4
50	53	7.5	45.5	14	68	71	16	M8x1.25	16	13	M8x1.25	21.5	50	G1/8	8	6.5	2.5	6.1	4
63	57.5	7.5	50	15	87	91	16	M8x1.25	21.5	50	M10x1.5	24	62	G1/8	8	8.5	3.5	6.1	4
80	64	8	56	16	107	111	20	M10x1.5	24	62	M10x1.5	27	82	G1/8	8.5	10.5	4.5	8.1	4
100	76.5	10	66.5	19	128	133	25	M12x1.75	24	22	M10x1.5	32	103	G1/4	10.5	12.5	6	8.1	4

ACPD

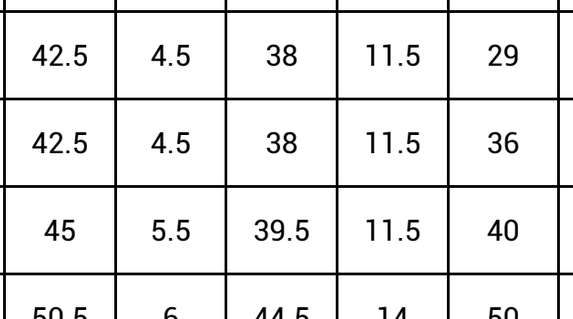

ACPJ

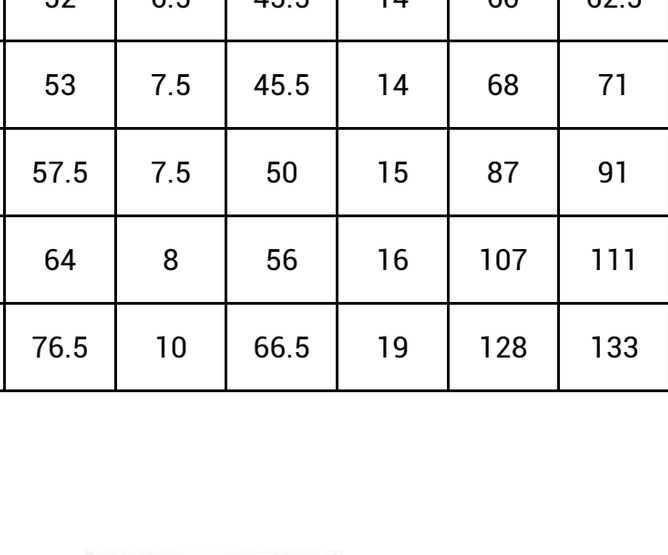

Cylinder Diameter/Symbol	A(ACPD)	A(ACPJ)	AB	AC	AF	E	FA
12	47	59.5	4.5	38	17	M5X0.8	4
16	47	63.5	4.5	38	21	M6x1.0	5
20	47	67.5	4.5	38	25	M8x1.25	6
25	50.5	70	5.5	39.5	25	M8x1.25	6
32	56.5	77.5	6	44.5	27	M10x1.25	6
50	60.5	81	7.5	45.5	28	M12x1.25	7
63	65	85.5	7.5	50	28	M12x1.25	7
80	72	93	8	56	29	M16x1.5	8
100	86.5	112	10	66.5	35.5	M20x1.5	10

ACP-B

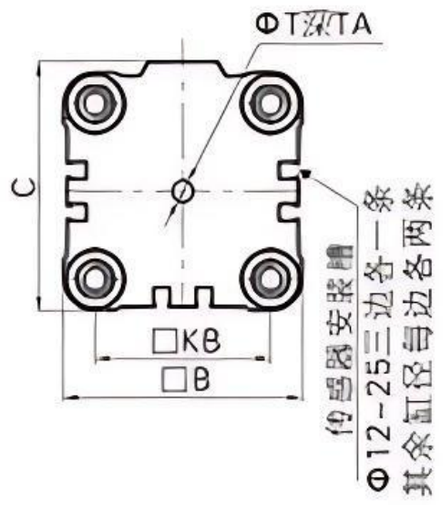

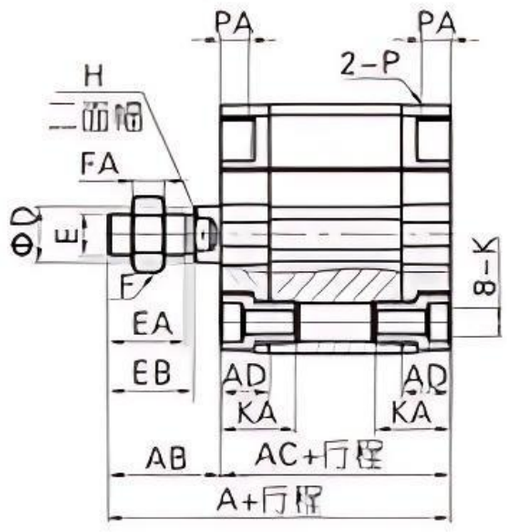

ASP-B

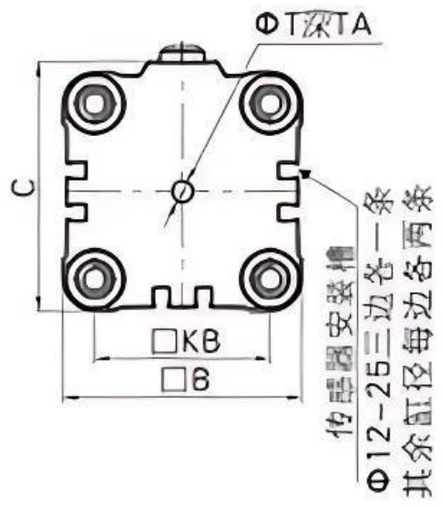

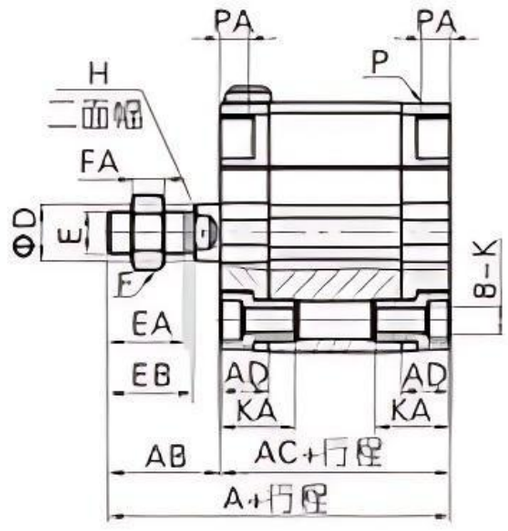

ATP-B

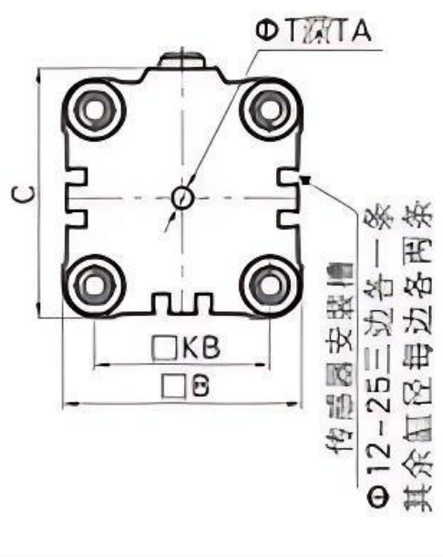

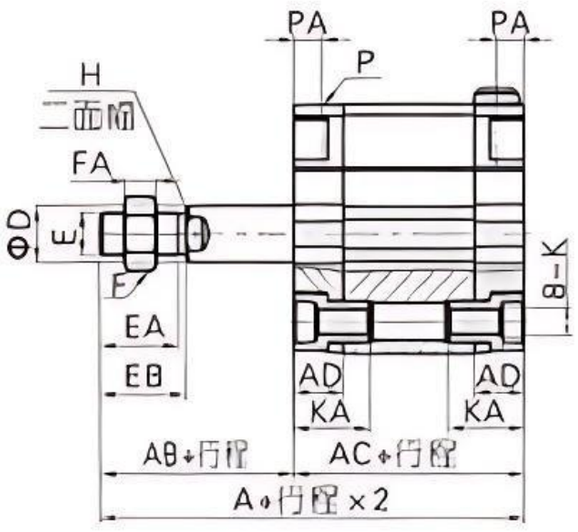

Cylinder diameter(mm)/Symbol	A	AB	AC	AD	B	C	D	E	EA	EB	F	FA	H	K	KA	KB	P	PA	T	TA
12	58.5	20.5	38	11.5	29	30	6	M6x1.2	15	16	10	5	5	M4x0.7	18	18	M5x0.8	7	6	4
16	62.5	24.5	38	11.5	29	30	8	M8x1.25	19	20	12	6	6	M4x0.7	18	18	M5x0.8	7	6	4
20	64.5	26.5	38	11.5	36	37.5	10	M10x1.25	20	22	17	6	8	M5x0.8	18	22	M5x0.8	7	6	4
25	67	27.5	39.5	11.5	40	41.5	10	M10x1.25	20	22	17	6	8	M5x0.8	18	26	M5x0.8	7	6.1	4
32	72.5	28	44.5	14	50	52	12	M10x1.25	20	22	17	6	10	M6x1.0	21	32	G1/8	8	6.1	4
40	74	28.5	45.5	14	60	62.5	12	M10x1.25	20	22	17	6	10	M6x1.0	21	42	G1/8	8	6.1	4
50	77	31.5	45.5	14	68	71	16	M12x1.25	22	24	17	7	13	M8x1.25	21.5	50	G1/8	8	6.1	4
63	81.5	31.5	50	15	87	91	16	M12x1.25	22	24	17	7	13	M10x1.5	24	62	G1/8	8	8.1	4
80	96	40	56	16	107	111	20	M16x1.5	30	32	23	8	17	M10x1.5	27	82	G1/8	8.5	8.1	4
100	116.5	50	66.5	19	128	133	25	M20x1.5	38	40	26	10	22	M10x1.5	32	103	G1/4	10.5	8.1	4

EXTERNAL SPECIFICATIONS OF THE ATTACHMENT

LB

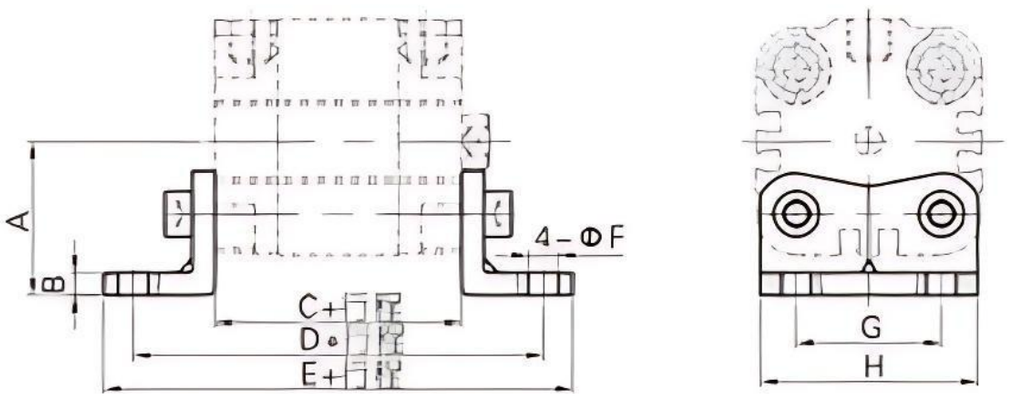

Cylinder diameter(mm)/Symbol	A	B	C	D	E	F	G	H
12	22	3	38	64	73.6	5.5	18	27
16	22	3	38	64	73.6	5.5	18	27
20	27	3.8	38	70	82.6	6.5	22	34
25	29	3.8	39.5	71.5	84	6.5	26	38
32	34	4.8	44.5	80.5	97.1	6.5	32	48
40	40.5	4.8	45.5	85.5	102.1	9	42	58
50	47	5.8	45.5	93.5	110.1	9	50	66
63	56.5	5.8	50	104	127.6	11	62	85
80	68.5	7.5	56	116	139.6	11	82	105
100	81	7.5	66.5	132.5	156.1	13.5	103	126

FA/FB

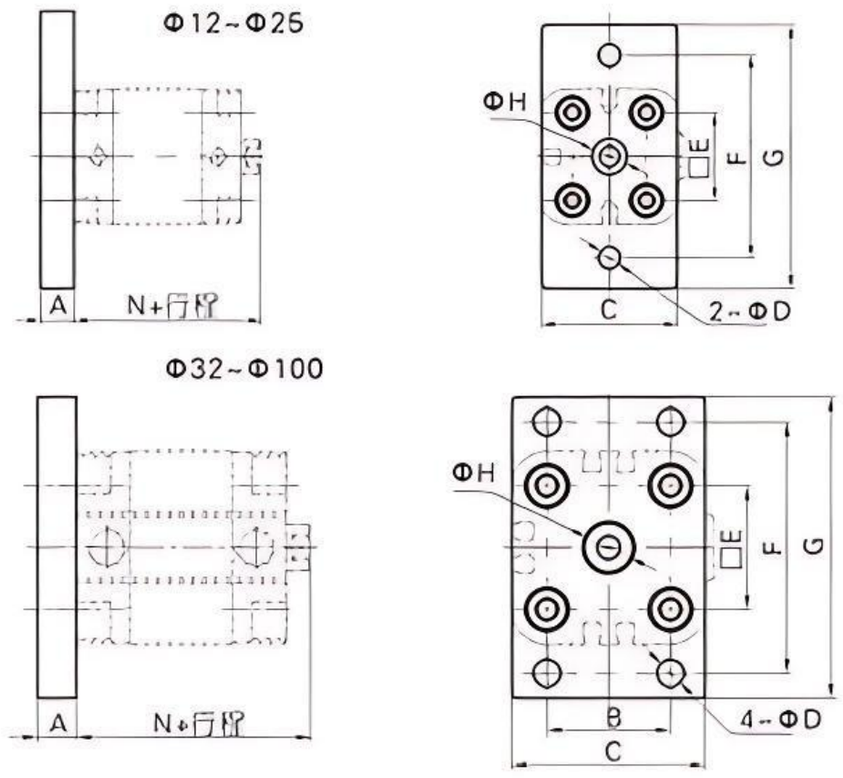

Cylinder diameter(mm)/Symbol	A	B	C	D	E	F	G	H	N
12	10	-	30	5.5	18	43	55	14	42.5
16	10	-	30	5.5	18	43	55	14	42.5
20	10	-	36	6.5	22	55	68	16	42.5
25	10	-	40	6.5	26	60	78	16	45
32	10	32	50	7	32	65	78	18	50.5
40	10	36	60	9	42	82	102	18	52
50	12	45	68	9	50	90	110	22	53
63	15	50	87	9	62	110	128	22	57.5
80	15	63	107	12	82	135	160	28	64
100	15	75	128	14	103	163	190	34	76.5

CA

Φ12~Φ25

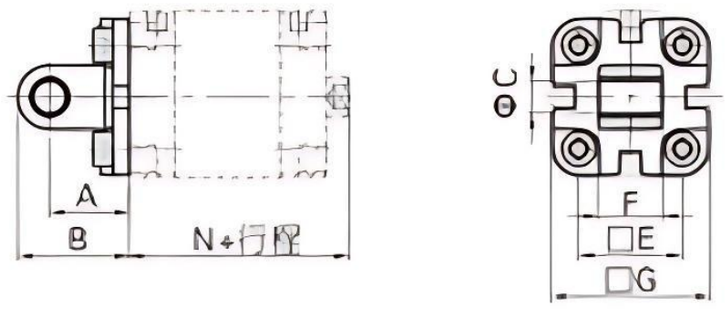

CB

Φ32~Φ100

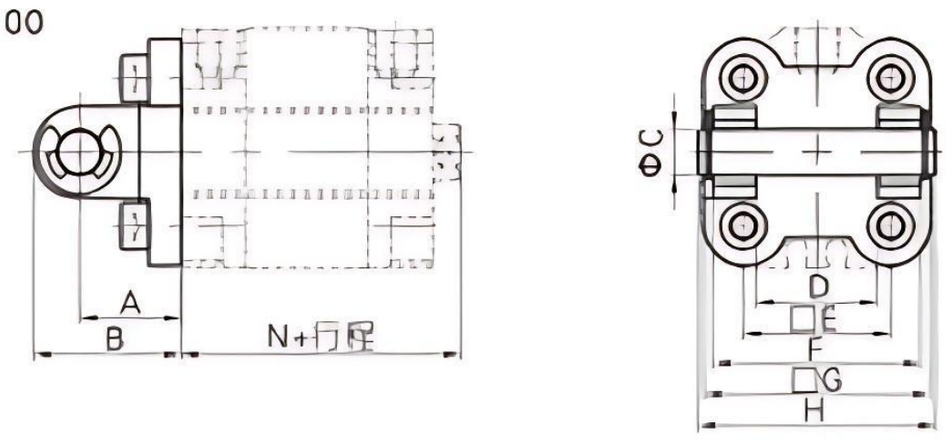

Cylinder diameter(mm)/Symbol	A	B	C	D	E	F	G	H	N
12	16	22	6	-	18	12	27.5	-	42.5
16	16	22	6	-	18	12	27.5	-	42.5
20	20	28	8	-	22	16	34.5	-	42.5
25	20	28	8	-	26	16	38.5	-	45
32	22	32	10	26	32	45	48	51.5	50.5
40	25	37	12	28	42	52	58	59	52
50	27	39	12	32	50	60	66	67	53
63	32	48	16	40	62	70	85	77	57.5
80	36	52	16	50	82	90	105	97	64
100	41	61	20	60	103	110	126	119	76.5